AMERICAN HERO® CAMO

AHC1SHL

6 Bearing System

HS 7.1:1 HIGH SPEED

Driven by innovation -
Fueled with Passion
Feel the Difference!

Reel Specifications

Model	Weight (oz.)	Gear Ratio	Line Capacity (yd./lb.)	RPT (in.)
AHC1SHL	7.2	7.1:1	120/12	31

FEATURES:

- One-piece graphite frame and sideplates
- Lightweight anodized aluminum spool
- 6-bearing system with stainless steel double shielded ball bearings and Zero-Reverse one-way clutch bearing
- Externally adjustable Magnetic Control System (MCS)
- Durable Rulon drag system provides up to 15 lbs. drag power
- High strength brass drive gear • Zirconia line guide
- Lew's® combat style grip handle knobs
- Lew's® combat style pad on thumb bar

ATTENTION BRAIDED LINE USERS!

If your Lew's® Baitcast reel has pre-drilled holes in the spool, you may tie your braid directly to the spool, by passing the braid thru the provided holes and tying a uni-knot.

If your Lew's® baitcast reel does not have pre-drilled holes in the spool, you will need to first tie on and spool at least 20 revolutions of monofilament line, and then tie your braided line to the monofilament line, with either a back-to-back uni-knot or an Albright knot.

Continue to spool your reel as normal, keeping strong tension on the line to ensure the line is firmly wound onto the spool to keep from "digging in" to underlying line layers when pressure is put on the line from fighting fish.

FAILURE TO PROPERLY SPOOL BRAIDED LINE ONTO YOUR REELS SPOOL WILL RESULT IN LINE SLIPPAGE, AND THE IMPRESSION YOUR DRAG IS NOT WORKING PROPERLY.

Performance – *Right out of the Box!*

Your Speed Spool® reel is designed for performance and functionality. From the way it conforms to your hand, to the way it reacts crisply and effortlessly to your command, you'll know the minute you grab onto your Speed Spool® that you've got a quality reel.

Your Speed Spool® reel exploits several new developments which will allow you to set yourself apart from the competition

High Strength Brass Gearing The drive gear is made from high strength brass for increased strength, durability, and smooth cranking.

One-piece Graphite Frame and Sideplates Your Speed Spool® reel utilizes a one-piece, lightweight graphite frame and sideplates. Lightweight plus strong, so you'll never have to worry about frame torque or twisting.

Lightweight Anodized Aluminum Spool The spool of your Speed Spool reel has been engineered to maximize casting distance. Anodized to withstand oxidation and abrasion.

High Strength Brass Gearing The drive gear is made from high strength brass for increased strength, durability, and smooth cranking.

ZERO REVERSE

Bearing The handle on your Speed Spool® reel will only rotate forward for rock solid hook setting. When you release the handle it will hold its position because of the Zero-Reverse bearing, never losing an inch on your catch; an invaluable property to have when you're pulling it in.

Full-Release Magnetic Control System (MCS) In order to combat backlash your Speed Spool® reel is equipped with an externally adjustable, full-release magnetic braking system. As the spool accelerates it experiences magnetic resistance, which can be controlled with a dial on the palming sideplate. The full-release magnetic brake has the ability to be backed for enough away from the spool to completely negate any effect on the acceleration of the spool.

Magnetic Control System MCS

Cast Control System A second feature exits to prevent backlash, the Cast Control System. An adjustment knob is found next to the star drag. This function saddles the spool shaft with steady pressure in order to stabilize spool speed.

To calibrate the system, reel your lure in until it rests on the tip of the rod, then tighten the knob until taut. Depress the thumb bar, and holding the rod horizontally loosen the knob slowly until the lure begins to descend. The spool should continue to spin after the lure contacts the ground, but should not complete more than one full rotation. If the spool does not continue to spin, the knob is too tight. If the spool completes more than one rotation, the knob is too loose. Repeat until you have achieved the desired results.

Bowed Aluminum Handle Our bowed aluminum handle will give you all the cranking power you need. The Lew's® custom SoftTouch contoured paddle knobs are an added bonus known for a comfortable grip and ease for all day fishing.

AMERICAN HERO® CAMO AHC1SHL

Maintenance and Care

When applying lubricant to your Speed Spool® reel, avoid using multi-purpose oil. Use lightweight oils or greases made for fishing reels. Apply oil to all bearings, the crankshaft and the worm gear. Apply grease to the bushings, pinion gears, drive gears, and crank gears.

After usage, your reel should be inspected for dirt or sand and cleaned if excessive build-up is present. If your reel has come in contact with saltwater it is important to flush all parts with water, dry and re-lubricate your reel. Through diligent cleaning and maintenance your Lew's® reel will provide you with years of reliability and sound performance.

To remove palming sideplate slide down level and pull slideplate off.

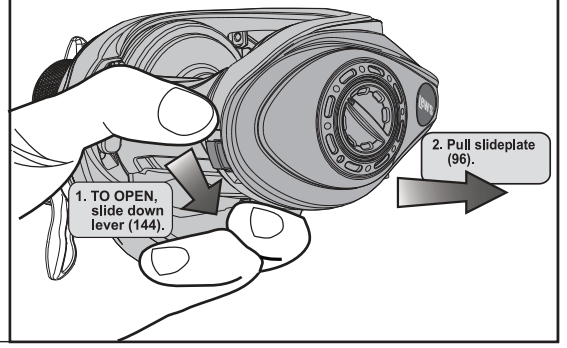

For professional cleaning and maintenance send your reel postage prepaid to:

LEW'S® 3031 N. Martin,
Springfield, MO 65803
877-470-5397 or 417-522-1093

Register Lew's product warranty online at: lews.com

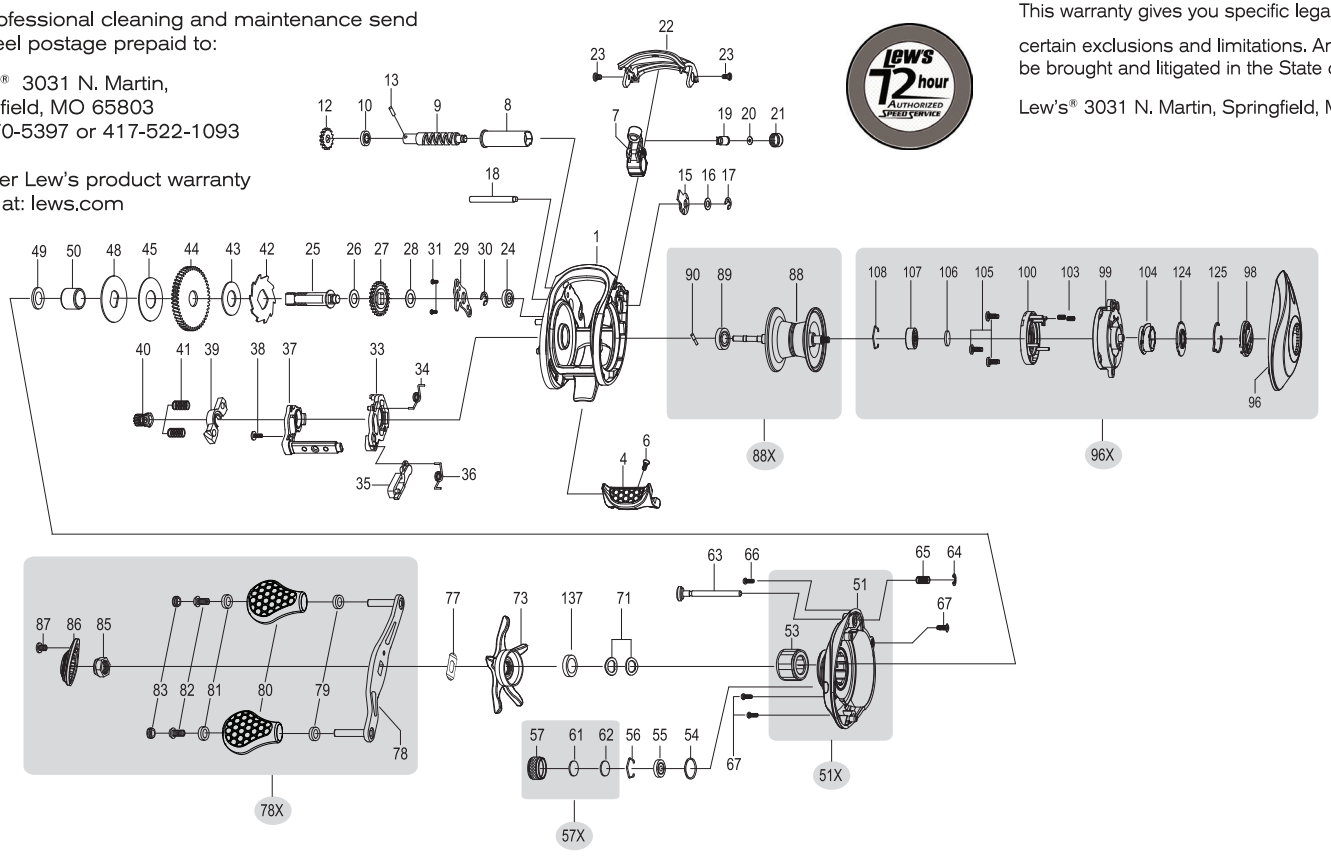

One Year Limited Warranty

Lew's® Warrants its products[1] to withstand normal[2] use for the purpose designed and intended when manufactured for a period of one (1) year from the original retail sale date to the original retail consumer. Lew's® will at its option repair or replace[3] Lew's® products when required for the warranty period and return[4] the product to the owner at no additional[5] cost to the owner.

[1]Numerous products have been manufactured under variations of the Lew's® name and under the Lew's® Logo by multiple businesses over the past 50 years. This warranty is specifically for products manufactured on behalf of Lew's® of Springfield, Missouri USA since January 1, 2010. Lew's® products manufactured by or on behalf of other entities prior to January 1, 2010 are not covered by this warranty. In all circumstances, this Warranty is Limited in Value to the original retail value of the product and is limited to actual damage to the Lew's® product and only the Lew's® product. [2]Loss of a product, and loss/damage of a product or parts due to the attempted repair or servicing of a Lew's® product by any person or business other than Lew's® or Lew's® Authorized Warranty Service Agent, and damage caused by or resulting from abuse, misuse, lack of recommended maintenance, accident, acts of God, and shipping damages occurring in transit to Lew's®
or Lew's® Authorized Agent are outside the scope of Lew's® Limited Warranty and will be repaired through Lew's® after warranty services at the expense of the consumer. [3]Any products replaced by Lew's® will be new or remanufactured by a Lew's® Authorized Agent with the same or next model upgrade product. [4]Lew's® will return warranted products to the consumer by reasonable means as determined by Lew's®. [5]Express or expedited services are the responsibility of the consumer as is sending the product to Lew's® or Lew's® Authorized Agent, for Warranty Service. Lew's® and Lew's® Service Agents as authorized by Lew's® are the sole agents authorized to repair or replace Lew's® products under the terms of this warranty. Only written changes by an officer of Lew's® can alter the terms or conditions of this warranty.

This warranty gives you specific legal rights including additional rights extended by some states which do not allow certain exclusions and limitations. Any action brought against Lew's® for the purpose of settling a warranty dispute shall be brought and litigated in the State of Missouri, County of Greene.

Lew's® 3031 N. Martin, Springfield, MO 65803 Phone: 877-470-5397 or 417-522-1093 FAX: 1-417-881-5387

KEY #	PART NAME	KEY #	PART NAME	KEY #	PART NAME
1	FRAME	37	CLUTCH LINK	78	HANDLE
4	CLUTCH BAR ASSEMBLY	38	CLUTCH LINK SCREW	78X	HANDLE ASSEMBLY
6	CLUTCH BAR SCREW	39	PINION YOKE	79	BUSHING
7	LEVEL WIND ASSEMBLY	40	PINION GEAR	80	HANDLE KNOB
8	PIPE	41	PINION YOKE SPRING (2)	81	BUSHING
9	WORM SHAFT	42	RATCHET	82	HANDLE KNOB SCREW
10	BALL BEARING	43	RATCHET WASHER	83	HANDLE KNOB CAP
12	IDLER(S)	44	DRIVE GEAR	85	HANDLE NUT
13	WORM SHAFT PIN	45	DRAG WASHER (L-3)	86	HANDLE NUT CAP
15	WORM SHAFT BUSHING (B)	48	DRAG WASHER (D)	87	SCREW
16	WORM SHAFT WASHER	49	SLEEVE WASHER (OPTIONAL)	88	SPOOL
17	E-RING	50	SLEEVE	88X	SPOOL ASSEMBLY
18	PILLAR	51	GEAR SIDE PLATE	89	BALL BEARING
19	LEVEL WIND PIN	51X	GEAR SIDE PLATE ASSEMBLY	90	PIN
20	SPACER (OPTIONAL)	53	ONE-WAY CLUTCH	96	PALM SIDE PLATE
21	LEVEL WIND NUT	54	O-RING	96X	PALM SIDE PLATE ASSEMBLY
22	FRONT COVER	55	BALL BEARING	98	CONTROL DIAL
23	FRONT COVER SCREW (2)	56	BEARING RETAINER	99	SPOOL COVER
24	BALL BEARING	57	CAST CONTROL CAP	100	MAGNET HOLDER ASSEMBLY
25	CRANK SHAFT	57X	CAST CONTROL CAP ASSEMBLY	104	SLIDE CAM-F
26	IDLER (L) WASHER (A)	61	TENSION WASHER	105	SPOOL COVER SCREW (3)
27	IDLER (L)	62	SPOOL SPACER (B)	106	SPOOL SPACER-A
28	IDLER (L) WASHER (B)	63	LOCKING PIN	107	BALL BEARING
29	BEARING PLATE	64	E-RING	108	BEARING RETAINER
30	E-RING	65	LOCKING PIN SPRING	124	SLIDE CAM-D
31	BEARING PLATE SCREW	66	GEAR SIDE PLATE SCREW (A)	125	CLICK SPRING
33	CLUTCH CAM	67	GEAR SIDE PLATE SCREW (B)	137	DRAG SPACER
34	CLUTCH SPRING	71	DRAG SPRING WASHER (A-2)		
35	KICK LEVER	73	STAR DRAG		
36	KICK LEVER SPRING	77	LEAF SPRING		

AHC1SHL

Key #	Description	Order ID #		Key #	Description	Order ID #
1	FRAME	DY-102720070		51X	GEAR SIDE PLATE ASSEMBLY	DY-U02721170
4	CLUTCH BAR ASSEMBLY	DY-102883090		53	ONE WAY CLUTCH	DY-102090010
5	CLUTCH LINK	DY-102724011		54	O-RING	DY-100071020
6	CLUTCH BAR SCREW	DY-101507030		55	BALL BEARING	DY-102971010
7	LEVEL WIND ASSEMBLY	DY-102717010		56	BEARING RETAINER	DY-101588011
8	PIPE	DY-101406010		57X	CAST CONTROL CAP ASSEMBLY	DY-101817050
9	WORM SHAFT	DY-100017013		61	TENSION WASHER	DY-100834010
10	BALL BEARING	DY-102954010		62	SPOOL SPACER-B	DY-100690010
11	WORM SHAFT BUSHING-A	DY-100145011		63	LOCKING PIN	DY-103635010
12	IDLER-S	DY-100019010		64	E-RING	DY-100621010
13	WORM SHAFT PIN	DY-100020010		65	LOCKING PIN SPRING	DY-101308010
16	WORM SHAFT WASHER	DY-100539020		66	GEAR SIDE COVER SCREW-A	DY-100202030
17	E-RING	DY-100047010		67	GEAR SIDE COVER SCREW-B	DY-100202020
18	PILLAR	DY-102711010		71	DRAG SPRING WASHER	DY-100088010
19	LEVEL WIND PIN	DY-100464011		73	STAR DRAG	DY-102033510
20	SPACER(OPTIONAL)	DY-100025010		77	LEAF SPRING	DY-100101010
21	LEVEL WIND NUT	DY-100288021		78X	HANDLE COMPLETE	DY-101741230
22	FRONT COVER	DY-102701070		79	BUSHING	DY-100196010
23	FRONT COVER SCREW	DY-100141020		80	HANDLE KNOB	DY-103807010
24	BALL BEARING	DY-102952010		81	BUSHING	DY-100196010
25	CRANK SHAFT	DY-100381012		82	HANDLE KNOB SCREW	DY-100180010
26	IDLER-L WASHER-A	DY-100548010		83	HANDLE KNOB CAP	DY-100181050
27	IDLER-L	DY-101938020		85	HANDLE NUT	DY-100391010
28	IDLER-L WASHER-B	DY-100045020		86	HANDLE NUT CAP	DY-101700010
29	BEARING PLATE	DY-102727010		87	SCREW	DY-101202020
30	E-RING	DY-100047010		88X	SPOOL COMPLETE	DY-103079120
31	BEARING PLATE SCREW	DY-100135010		89	BALL BEARING	DY-102970010
33	CLUTCH CAM	DY-102723010		90	PIN	DY-100120010
34	CLUTCH SPRING	DY-102690010		96X	PALM SIDE PLATE ASSEMBLY	DY-UA2981110
35	KICK LEVER	DY-102308011		98	CONTROL DIAL	DY-102917010
36	KICK LEVER SPRING	DY-102058010		99	SPOOL COVER	DY-102732010
38	CLUTCH CAM SCREW	DY-100293010		100	MAGNET HOLDER ASSEMBLY	DY-U02921010
39	PINION YOKE	DY-102083010		103	SPRING	DY-100486010
40	PINION GEAR	DY-100981013		104	SLIDE CAM-F	DY-102919010
41	PINION YOKE SPRING	DY-102465010		105	SPOOL COVER SCREW	DY-100141010
42	RATCHET	DY-101407010		106	SPOOL SPACER-A	DY-101850010
43	RATCHET WASHER	DY-102247010		107	BALL BEARING	DY-102971010
44	DRIVE GEAR	DY-102052010		108	BEARING RETAINER	DY-102976010
45	DRAG WASHER-L	DY-101531010		124	DIAL PLATE	DY-102918010
48	DRAG WASHER-D	DY-101367010		125	CLICK SPRING	DY-102002010
49	SLEEVE WASHER(OPTIONAL)	DY-100086030		137	DRAG SPACER	DY-100087010
50	SLEEVE	DY-101983010				