SS1HG3 , SS1SHG3 , SS1XHG3

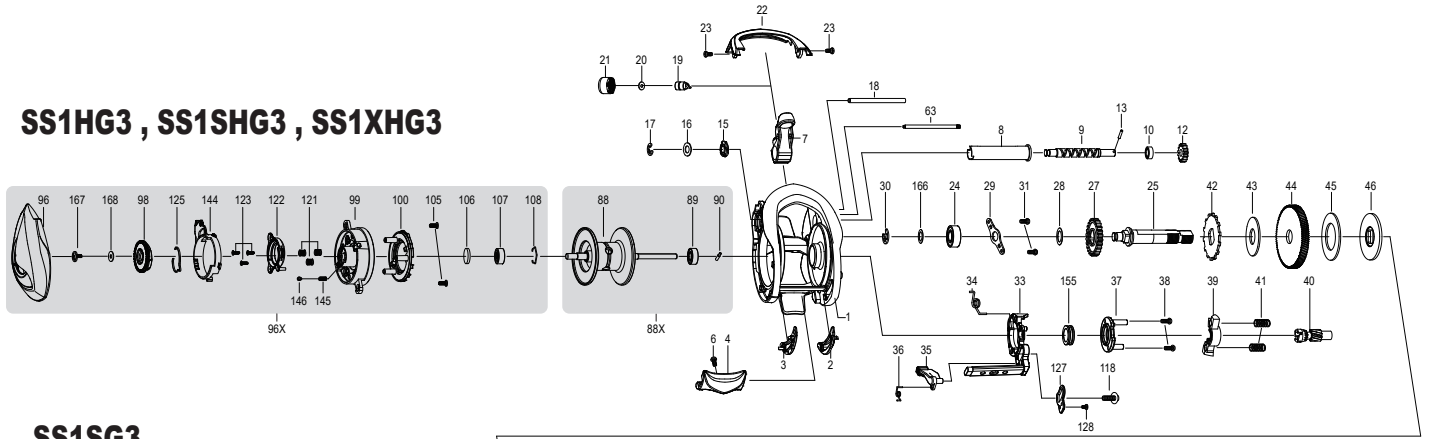

SS1SG3

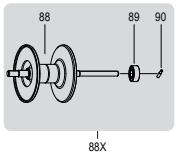

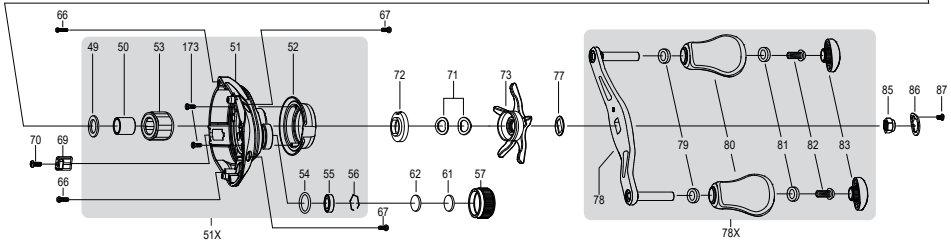

SS1HLG3 , SS1SHLG3 , SS1XHLG3

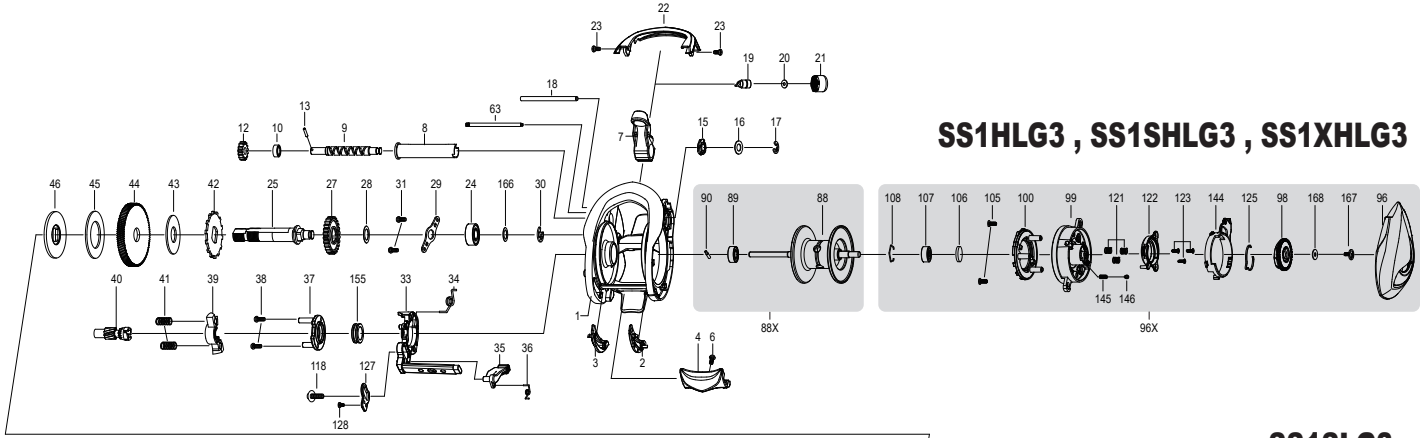

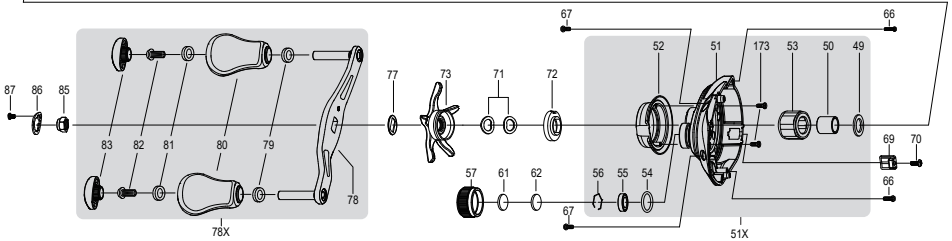

SS1SLG3

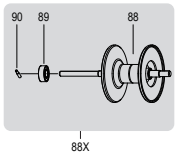

Key#	Part Name	Key#	Part Name	Key#	Part Name
1	FRAME	51X	GEAR SIDE COMPLETE	125	CLICK SPRING
2	CLUTCH BAR PLATE-R	52	GEAR SIDE COVER TRIM	127	LINK PLATE
3	CLUTCH BAR PLATE-L	53	ONE WAY CLUTCH	128	LINK PLATE SCREW
4	CLUTCH BAR	54	O-RING	144	LOCK LEVER
6	CLUTCH BAR SCREW	55	BALL BEARING	145	CLICK PIN SPRING
7	LEVEL WIND ASSEMBLY	56	BEARING RETAINER	146	CLICK PIN
8	PIPE	57	CAST CONTROL CAP	147	GUIDE PIN
9	WORM SHAFT	61	TENSION WASHER	155	BUSH
10	BALL BEARING	62	SPOOL SPACER-B	166	WASHER
12	IDLER-S	66	GEAR SIDE COVER SCREW-A (*2)	167	CONTROL DIAL SCREW
13	WORM SHAFT PIN	67	GEAR SIDE COVER SCREW-B (*2)	168	CONTROL DIAL WASHER
15	WORM SHAFT BUSHING-B	69	LUBE PORT CAP	173	GEAR SIDE TRIM SCREW (*2)
16	WORM SHAFT WASHER	70	LUBE PORT CAP SCREW		
17	E-RING	71	DRAG SPRING WASHER (*2)		
18	PILLAR	72	CLICK PLATE ASSEMBLY		
19	LEVEL WIND PIN	73	STAR DRAG ASSEMBLY		
20	SPACER(OPTIONAL)	77	HANDLE WASHER		
21	LEVEL WIND NUT	78	HANDLE		
22	FRONT COVER	78X	HANDLE COMPLETE		
23	FRONT COVER SCREW (*2)	79	BALL BEARING (*2)		
24	BALL BEARING	80	HANDLE KNOB (*2)		
25	CRANK SHAFT	81	BALL BEARING (*2)		
27	IDLER-L	82	HANDLE KNOB SCREW (*2)		
28	IDLER-L WASHER-B	83	HANDLE KNOB CAP (*2)		
29	BEARING PLATE	85	HANDLE NUT		
30	E-RING	86	HANDLE NUT RETAINER		
31	BEARING PLATE SCREW (*2)	87	SCREW		
33	CLUTCH CAM	88	SPOOL ASSEMBLY		
34	CLUTCH SPRING	88X	SPOOL COMPLETE		
35	KICK LEVER	89	BALL BEARING		
36	KICK LEVER SPRING	90	PIN		
37	CAM PLATE	96	PALM SIDE COVER		
38	CAM PLATE SCREW (*2)	96X	PALM SIDE COMPLETE		
39	PINION YOKE	98	CONTROL DIAL		
40	PINION GEAR	99	SPOOL COVER		
41	PINION YOKE SPRING (*2)	100	MAGNET HOLDER ASSEMBLY		
42	RATCHET	105	SPOOL COVER SCREW (*2)		
43	RATCHET WASHER	106	SPOOL SPACER-A		
44	DRIVE GEAR	107	BALL BEARING		
45	DRAG WASHER-L	108	BEARING RETAINER		
46	DRAG WASHER-D	118	CLUTCH SCREW		
49	SLEEVE WASHER(OPTIONAL)	121	SLIDE CAM SPRING (*3)		
50	SLEEVE	122	SLIDE CAM-H		
51	GEAR SIDE COVER	123	SLIDE CAM SCREW (*3)		